OPERATING INSTRUCTIONS

MAINTENANCE & PARTS LIST

12"AGS

12" TILTING ABOR SAWBENCH TYPE

12" TILTING ARBOR SAWBENCH
TYPE 12" AGS

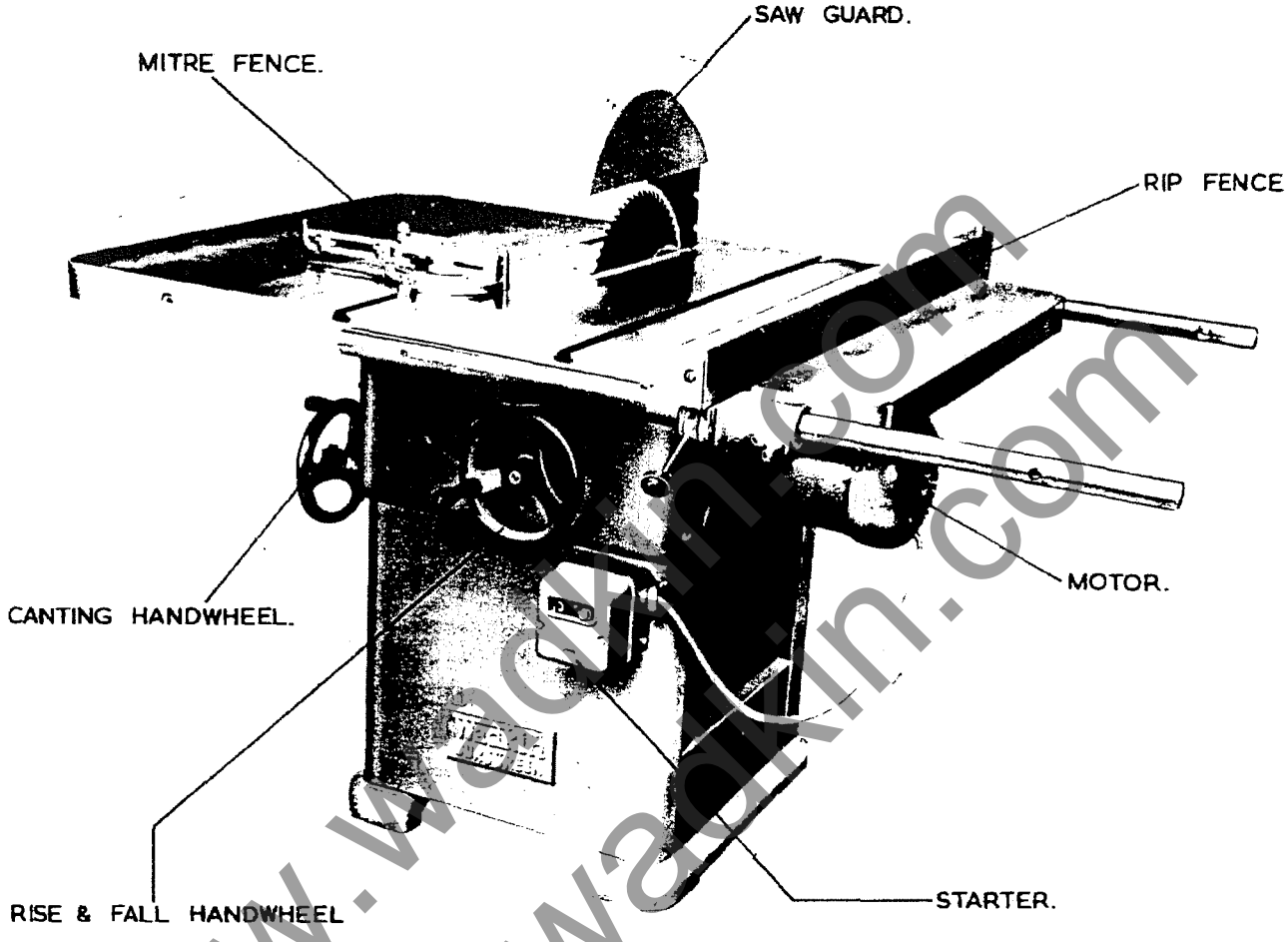

FIG. 1.

SPECIFICATION

Maximum diameter of saw...	12"	305 mm
Diameter of saw arbor	1"	25.4 mm
Maximum depth - vertical cut...	4"	101 mm
Maximum depth - 45° cut...	2¾"	70 mm
Maximum size of dado or grooving set recommended...	8" x ⅛"	200mm x 22 mm
Maximum size of circular cutterblock for moulding..	4⅞" x 15/16"	120mm x 23 mm
Speed of saw spindle.	3,200 r.p.m.	
Size of table...	34" x 24"	865mm x 610mm
*Size of table with extensions (each extension table is 12" x 34" - 305 mm x 865 mm)	34" x 48"	865mm x 1220mm
Saw to front edge of table with saw in top position	17¼"	440 mm
Fence movement to right of saw.	33"	840 mm
Saw cants to right...	45°	
Ripping fence...	41½" long x 2½" high	1054mm x 63.5mm
Table height	34"	865 mm
H.P. of motor...	3	3
Net weight.	590 lb.	270 kg.
Gross weight	760 lb.	340 kg.
Shipping dimensions..	28 cu. ft.	.8 cu. m.

*Included in standard price of machine

INSTALLATION

Remove protective coating from all bright parts by applying a cloth soaked in paraffin, turpentine or other solvent.

When the machine is cased for export the extension tables, rip fence, fence bars and motor are removed and packed individually. Remove and re-assemble as shown in Fig. 1.

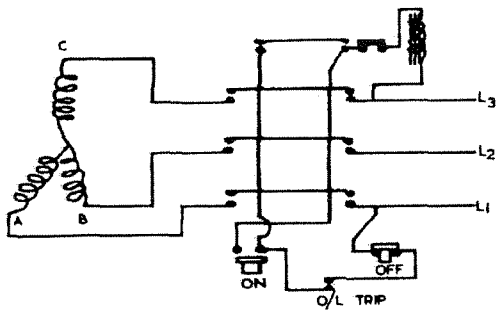

WIRING DIAGRAM FOR 3 PHASE SUPPLY.

FIG. 2.

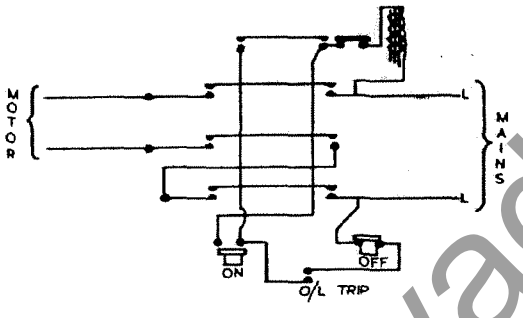

WIRING DIAGRAM FOR 1 PHASE SUPPLY.

FIG. 3.

WIRING DETAILS

The motor and control gear have been wired in before despatch. All that is required is to connect the power supply to the starter.

Points to note when connecting to power supply:-

1. Check the voltage, phase and frequency correspond to those on the motor plate, also the correct coils and heaters are fitted to the starter.
2. It is important that the correct cable is used to give the correct voltage to the starter as running on low voltage will damage the motor.
3. Check the main line fuses are of the correct capacity. See list below.
4. Connect the line leads to the appropriate terminals. See Fig. 2 for 3 phase supply and Fig. 3 for 1 phase supply.
5. Check all connections are sound.
6. Check the rotation of the motor for correct direction. If this is incorrect reverse any two of the line lead connections for 3 phase supply.

VOLTAGE	PHASE	H.P.	S.W.G. TINNED COPPER WIRE	AMPS
220	3	3	21	29
380/420	3	3	24	17
550	3	3 & 5	24	17
220	3	5	19	38
380/420	3	5	22	24
200/250	1	3	19	38

LUBRICATION

It is advisable to keep all bright parts covered with a thin film of oil to prevent rusting.

TYPE OF OIL RECOMMENDED POWER EM125
TYPE OF GREASE RECOMMENDED SHELL ALVANIA 3

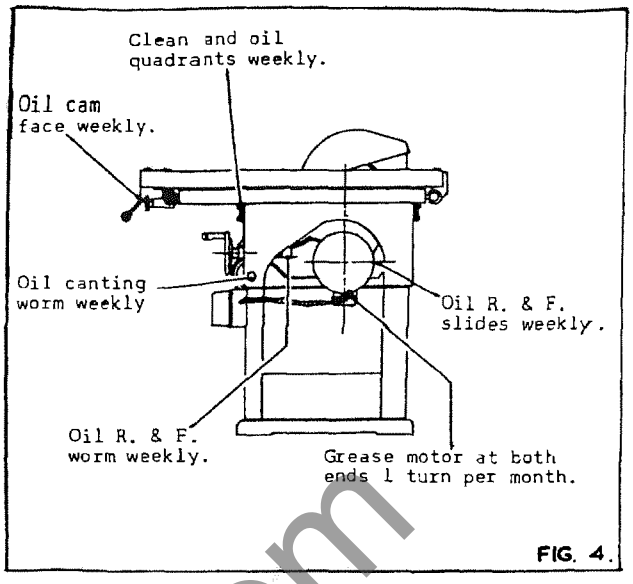

FIG. 4.

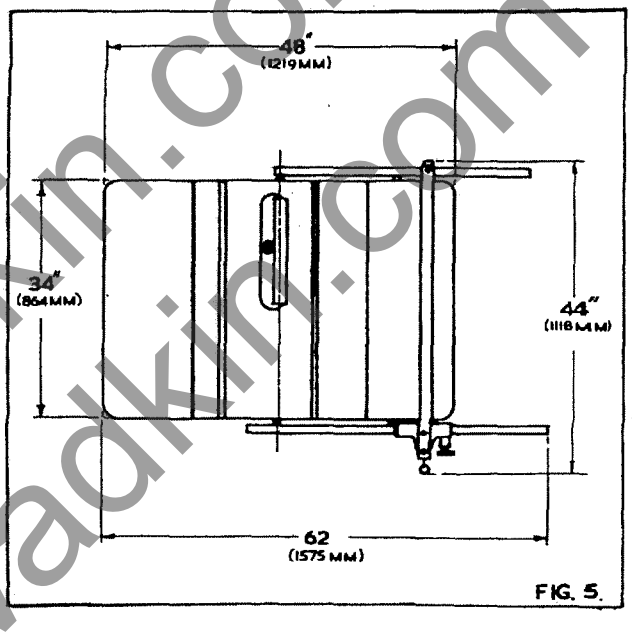

FIG. 5.

FOUNDATION

The clearances required for this machine are shown in Fig. 5.

MOUNTING SAWBLADES

To mount a sawblade the undermentioned procedure should be followed:-

1. Check the machine is isolated before starting to fit sawblade.
2. Swing the sawguard to the top position.
3. Remove aluminium table insert and raise saw arbor to its highest position.
4. Remove the arbor nut (left hand thread) and front saw flange.
5. Select the blade which is required depending on the type of work which is to be done. Check the blade is free from all dirt, gum or sawdust especially where it will be gripped by the flanges. Mount the blade on the arbor. Check front saw flange is clean and then fit onto saw arbor. The saw teeth should point towards the front of the machine.

NOTE:- If the flanges and the saw are not clean the saw will run out of true, hence causing vibration.

6. Lock the saw securely in position with the arbor nut (left hand thread). To tighten arbor nut hold spindle in position with the toggle bar in the back saw flange.
7. Replace table insert and position saw guard depending on the thickness of timber to be worked.

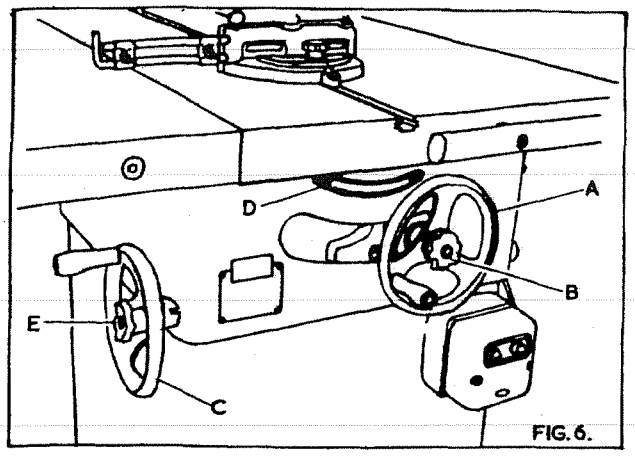

FIG. 6.

RISE AND FALL CONTROLS

The saw arbor rises and falls a total travel of 4" (101 mm). The travel of the saw is pre-set before despatch from the works. The rise and fall is controlled by the conveniently placed handwheel "A", in Fig. 6. The rise and fall is through a wormwheel and racked quadrant.

To lock the saw in any position, lock plastic handwheel "B".

CANTING CONTROLS

The saw cants 45° to the right, with positive stops at 90° and 45°, which are accurately set before despatch from the works. The motion is through a wormwheel and racked guadrant and is controlled by a conveniently placed handwheel "C" in Fig. 6. The angle of cant is shown on the graduated scale "D" in Fig. 6. To lock the saw at any angle, lock plastic handwheel "E".

All adjustments and alignments listed below have been carefully set and checked and the whole machine thoroughly tested before despatch from the works. During the first few weeks of operation and at regular intervals afterwards, certain items such as belt tension should be checked carefully. When adjustments are necessary proceed in accordance with the relative instructions given.

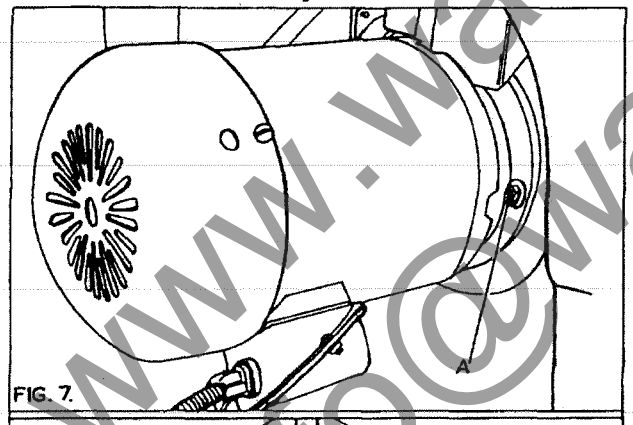

FIG. 7.

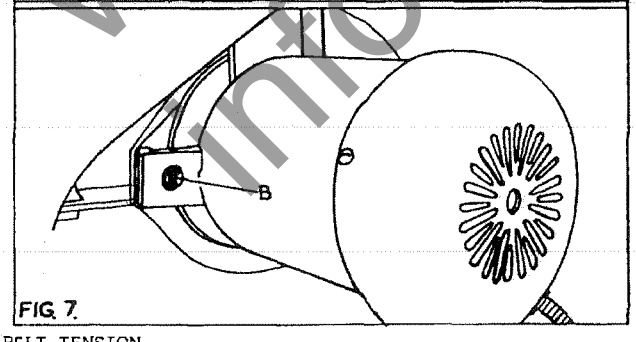

FIG. 7.

BELT TENSION

The drive is by two vee belts from a 3 HP motor. To tension the belts loosen the hexagon nut "A", in Fig. 7, also hexagon nut "B". Swing motor until the required tension is reached, then re-lock the hexagon nuts.

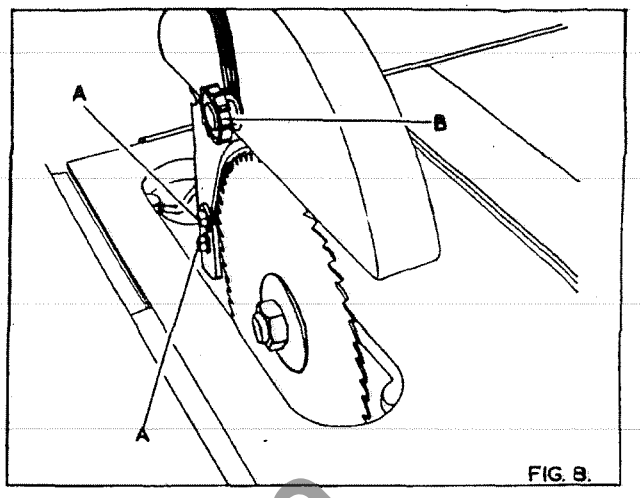

FIG. 8.

HOW TO ADJUST GUARD AND RIVING KNIFE

The riving knife complete with the guard rises and falls with the saw. The riving knife should be brought to within ¼" (6 mm) of the saw at the closest point. To adjust the riving knife to this position, loosen the two hexagon nuts "A" in Fig. 8, position riving knife where required then re-lock in position.

The guard should then be adjusted to protect as much of the saw as possible by loosening the handwheel "B" and positioning the guard where required. When set re-lock handwheel "B".

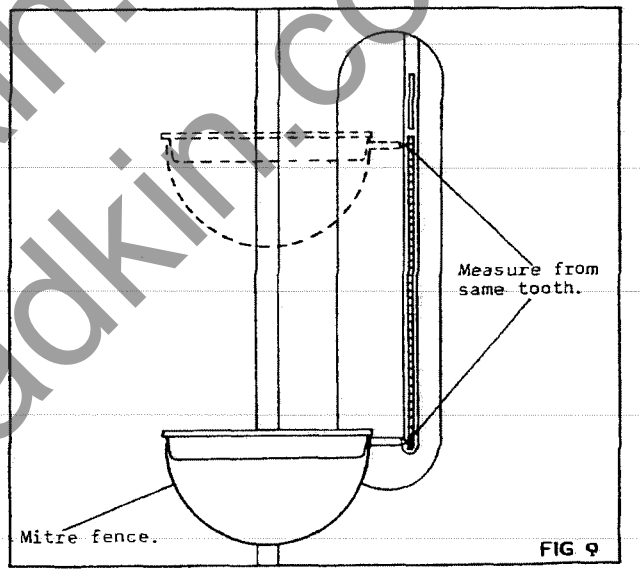

FIG 9

SETTING TABLE IN LINE WITH SAW

The table grooves are accurately set before despatch, but should the table be disturbed for any reason the undermentioned procedure should be followed to set the table grooves parallel to the saw:-

1. Loosen the four ⅜" whit. nuts securing the table to the main frame.
2. With the saw fitted to arbor, select a tooth and position straight stop rod of mitre fence so that it just touches the saw as shown in Fig. 9.
3. Slide mitre fence to rear position of the saw, swing tooth of saw which was used in item 2. Check whether the stop rod touches the tooth by the same amount. Should the slot be out of align with the saw, position table until correct.

   The correct position of the saw in relation to the table insert slot is 1" (25mm) from the right hand side. This will ensure clearance on the table insert when the saw is canted. When set tighten all screws.
4. To check this alignment cut several pieces of wood using the mitre fence to see there is no back cut as the stock is passed through the sawblade.

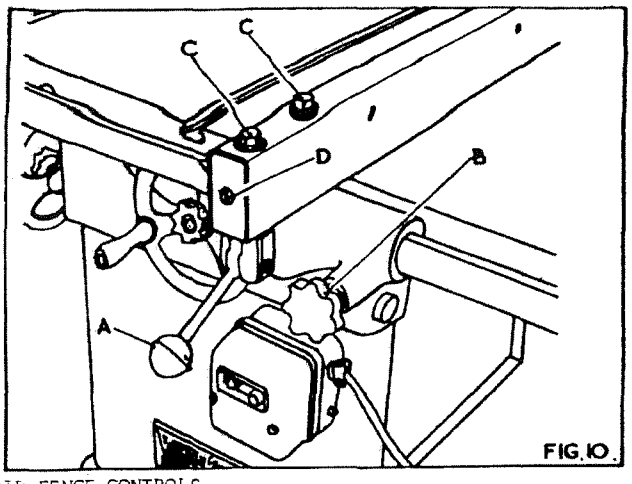

FIG.10.

RIP FENCE CONTROLS

The rip fence slides on two round bars at the front and rear of the table. The fence is provided with rapid and micro adjustment, also an effective lock.

For rapid adjustment the undermentioned procedure should be followed:-

1. Lift handle "A" in Fig. 10 and disengage the pinion from the front racked fence bar by pulling handwheel "B" out of the fence front bracket.
2. Position fence where required and depress lever "A" to lock fence in position.

For micro adjustment the pinion should be engaged in the front racked fence bar, i.e. handwheel "B" pushed into the fence front bracket.

FENCE ALIGNMENT

To check the fence alignment the undermentioned procedure should be followed:-

1. Position rip fence near to the edge of the mitre fence slot that is furthest away from the saw and lock in position.
2. In this position the distance from the fence to the mitre fence slot should be approximately 1/32" (.8 mm) more at the rear of the table than at the front of the table, i.e. 1/32" (.8 mm) lead off.
3. If fence is incorrectly aligned, loosen the two hexagon head bolts "C", in Fig. 10, and re-align as above. When set tighten all bolts.

It should be noted that the locking action of the fence is in three stages. The first stage, which is made possible by a spring loaded plunger, and ensures that the fence is always lined up, as set, to the saw before the final locking. The second stage locks the fence back bracket in position and the final stage locks the front bracket securely in position.

Should the locking action of the fence be incorrect, the fence connecting rod nut "D" should be adjusted. Turning nut "D" in a clockwise direction increases the locking power of the rear lock and in an anti-clockwise direction reduces the locking power. The correct locking procedure for the fence is as described above.

SETTING SAW TO RIVING KNIFE

It is most important that the saw and the riving knife are in line. To re-set after the spindle has been disturbed the undermentioned procedure should be followed:-

1. Loosen the hexagon head adjuster bolt "A" in Fig. 12, and tap spindle where required, taking care not to damage the threads on the spindle end. Place a steel rule along both sides of riving knife to check whether the saw is central.
2. When set re-tighten the hexagon head bolt "A".
3. To check this setting feed a short piece of timber from the rear, along both sides of the riving knife. If the riving knife is incorrectly set the blade will cut unequal shoulders as shown in Fig. 11 (a) and when correctly set equal shoulders as shown in Fig. 11 (b).

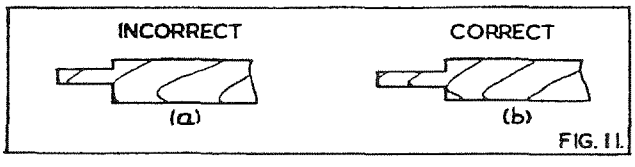

FIG. 11.

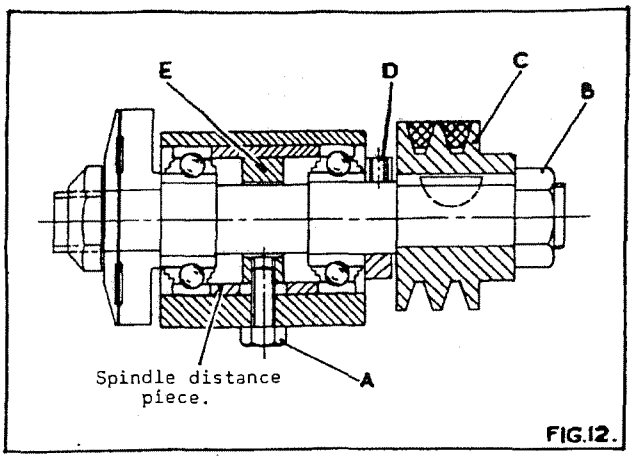

FIG.12.

HOW TO REPLACE SPINDLE BEARINGS

To replace the spindle bearings the undermentioned procedure should be followed:-

1. Remove saw, sawguard complete with riving knife and the table.
2. Release the tension on the belts as previously described and remove belts.
   Now working from the pulley end of the spindle.
3. Remove the 1" fine thread nut (right hand thread) "B" in Fig. 12, remove spindle pulley "C" which is keyed to the spindle.
4. Remove the hexagon head bolt "A" securing the remaining spindle assembly in the housing, tap out assembly from the pulley end. Care should be taken not to damage the threads on spindle end.
5. To remove the bearings remove the woodruff key then loosen the two ¼" whit. socket head grubscrew "D", remove the spindle locking collar.
6. The bearing and spindle distance piece can now be driven from the spindle.

The bearings should now be replaced as the arrangement in Fig. 12. Care should be taken not to pre-load the bearings, i.e. the spindle distance piece should be just free between the two bearings.

When the locking collar has been replaced and the assembly is ready to be replaced in the spindle housing a socket head grubscrew should be inserted in the spindle trapping collar "E". This will assist in lining up the ⅜" whit. x 1" long hexagon head bolt "A" on assembly.

To re-assemble the spindle assembly into the spindle housing:-

1. Line up socket head grubscrew with the hole in the spindle housing and tap in spindle assembly.
2. Remove socket head grubscrew and replace hexagon head bolt, "A".
3. Replace riving knife and set saw central to riving knife as previously described.
4. Replace the pulley and belts then re-tension belts. The table can now be replaced.
5. Before locking table in position ensure the mitre fence slot is parallel to the saw as previously described. When set tighten all bolts.

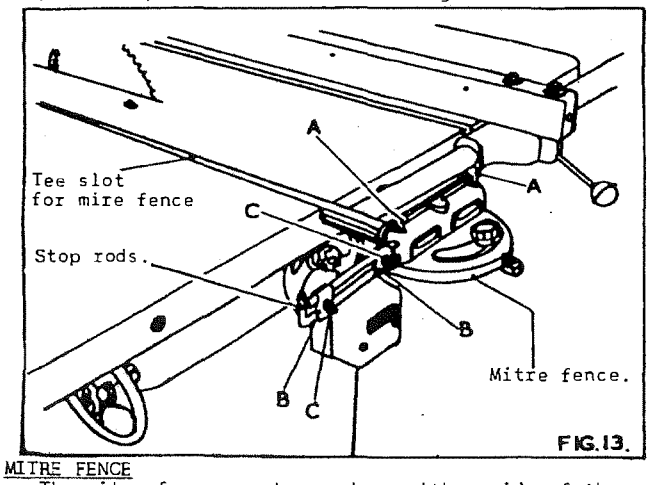

FIG.13.

MITRE FENCE

The mitre fence can be used on either side of the saw and slides in a tee slot, which should be kept clean, hence increasing the capacity which can be crosscut to 28" (710 mm).

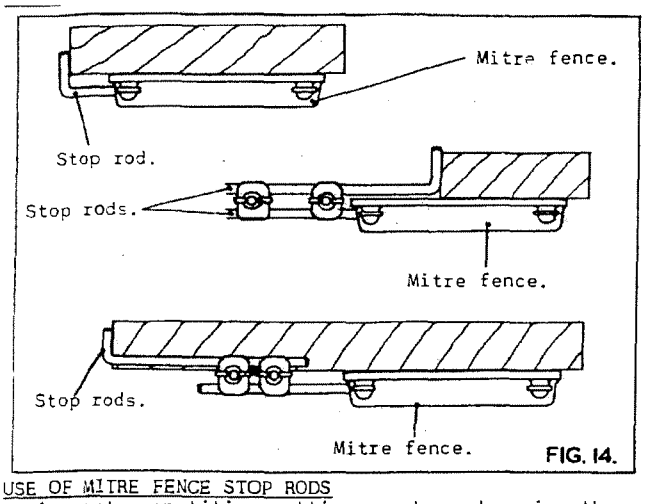

FIG. 14.

USE OF MITRE FENCE STOP RODS

Accurate repetitive cutting can be made using the stop rods see Fig. 13.

The rods are held in the fence by the thumbscrews "A" in Fig. 13 and the stop rods held together by the two clamps "B", to adjust the bars by the clamps loosen the wingnuts "C".

See Fig. 14 for several positions in which the stop rods can be used.

NOTE:- Do not use rods on the same side of the saw as the cut, since they will be in the path of the cut thus damage can be done to the saw if contact is made.

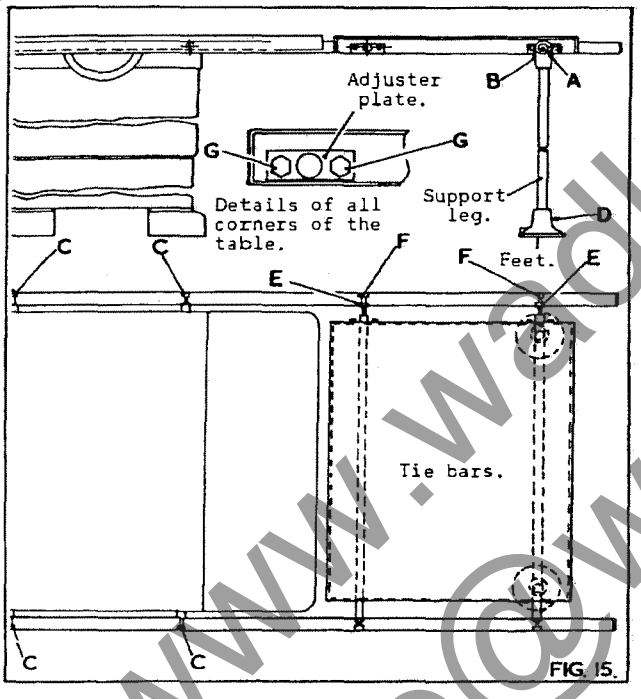

FIG. 15.

ARRANGEMENT OF SHEET METAL EXTENSION TABLE

A sheet metal extension table can be supplied to fit to the right of the saw as shown in Fig. 15. This table increases the capacity to the right of the saw to 50" (1270mm) between the saw and rip fence.

To assemble table the undermentioned procedure should be followed:-

1. Remove parts from parcel and remove protective coating by applying a cloth soaked in paraffin, turpentine or other solvent and assemble as shown in Fig. 15.
2. Remove existing fence bars and replace with long bars supplied with the table ensuring replacement bars are correctly positioned, i.e. zero mark on graduated bar to the centre of the table.
3. Centralise the table with the main table of the machine. Loosen socket head grubscrew "A" in Fig. 15 and keeping the filboes "B" pressed against the inside of the extension table. The whole assembly can slide along the tie bars. When central with the main table re-tighten socket head grubscrew "A".
4. Loosen the four socket head cap screw "C" securing the fence slide bars to the table and square head bolts "D" securing the feet to the support legs. Raise or lower the support legs until the fence slide bars are parallel with the main table with 1/32" (.8 mm) to 1/16" (1.6 mm) clearance between the table and the bottom of the rip fence throughout the entire length. When set re-tighten all the screws.
5. Loosen the locknuts "E" and adjust socket head cap screws "F" until the rear fence slide bar is parallel to the front slide bar. When set re-lock the locknuts "E".
6. Loosen the hexagon head bolts and nuts "G" securing the adjuster plates to the extension table. Raise or lower the extension table until the table is level with the machine table. Check by means of a straight edge. When correctly set re-tighten the hexagon head bolts and nuts "G". The table is now ready for use.

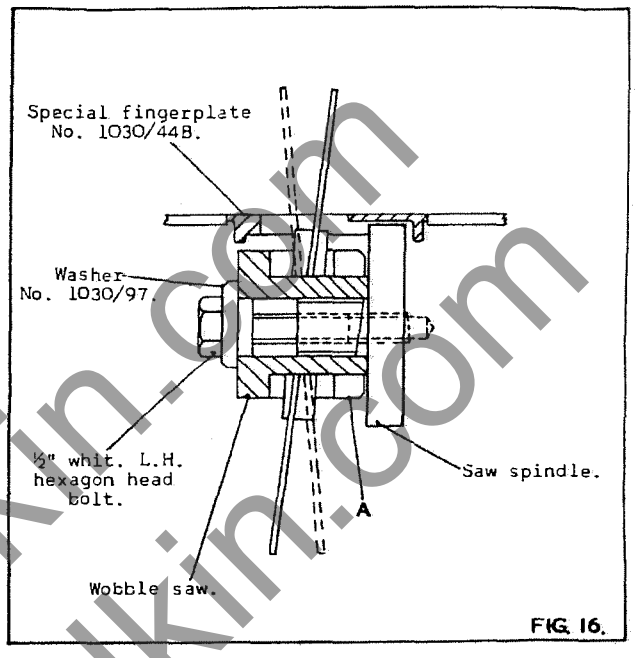

FIG. 16.

HOW TO FIT WOBBLE SAW

To fit wobble saw the undermentioned procedure should be followed:-

1. Remove table insert, riving knife complete with guard and front saw flange, keep these in a dry safe place.
2. Remove ½" whit. (left hand thread) socket head grubscrew from the end of the saw spindle.
3. Fit wobble saw to saw spindle as shown in Fig. 16, and secure to saw spindle by means of the ½" whit. left hand thread hexagon head bolt supplied.
4. All that is now required is to set the saw to wobble to give the size of slot which is required to be cut.
5. To adjust saw loosen nut "A" and move saw complete with large collars to required position. When set re-lock nut "A".

Maximum diameter of saw which can be used is 8" (203 mm).

Table insert ref. No. 1030/44B should be used when wobble saw is fitted.

After the job has been completed with the wobble saw, replace the ½" whit. left hand thread socket head grubscrew into the spindle end.

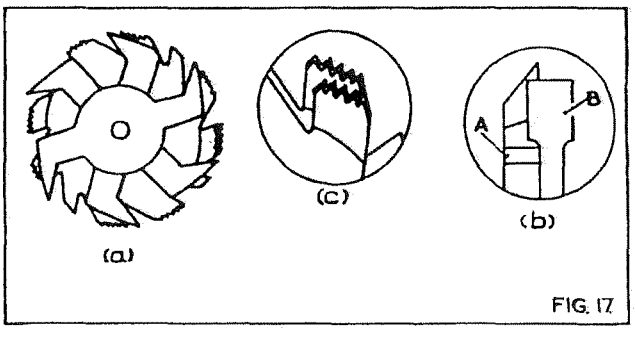

FIG. 17

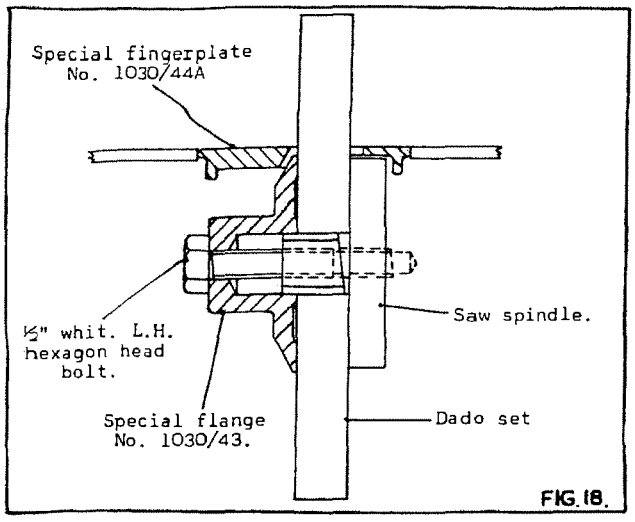

FIG. 18.

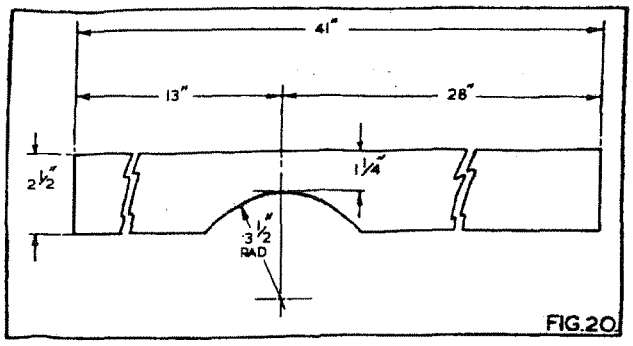

FIG. 20.

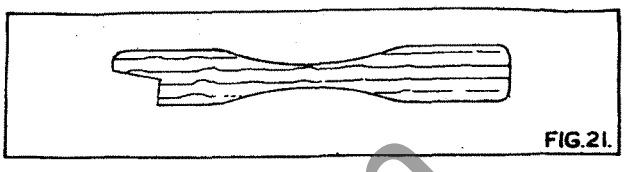
FIG. 21.

HOW TO FIT DADO HEAD

A dado head is made up of two outside saws and five inner cutters. Various combinations of saws and cutters can be used to cut grooves from ⅛" to ⅞" (3 mm to 22 mm) wide. Inner cutters are heavily swaged and must be arranged so that the heavy portion falls in the gullets of the outside saws, as shown in Fig. 17 (a).

Fig. 17 (b) shows how the saws and cutters overlap. "A" being the saw and "B" being the inside cutter.

A ¼" (6 mm) groove is cut by using the two outside saws fitting the ground teeth directly opposite as shown in Fig. 17 (c), in order to allow clearance for the slight set of the saw teeth.

The dado head is secured to the saw spindle by means of a special flange as shown in Fig. 18. To fit dado head remove the table insert, riving knife complete with sawguard, front saw flange and the ½" whit. left hand thread socket head grubscrew from the end of the spindle.

Fit the outer saws and required inner cutters on the spindle and lock in position with the special front flange and ½" whit. left hand thread hexagon head bolt supplied.

The table insert Ref. No. 1030/44A should be used when dado head is fitted.

When the job is completed with the dado head replace the ½" whit. left hand thread socket head grubscrew in the spindle end.

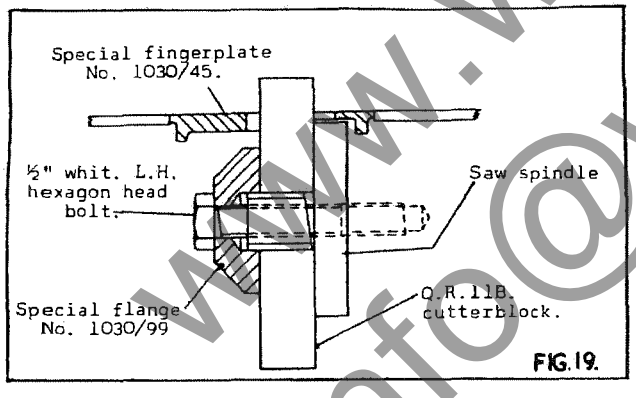

FIG. 19.

HOW TO FIT MOULDING CUTTERBLOCK

The cutterblock is 4⅞" dia. x 15/16" wide (124 mm x 24 mm) and takes 5/32" (4 mm) and ¼" (6 mm) thick cutters. The cutterblock is secured to the spindle by means of special flange, as shown in Fig. 19. The procedure when fitting the cutterblock is identical to that when fitting the wobble saw and the dado set.

The table insert Ref. No. 1030/45 should be used when the cutterblock is fitted.

When using the cutterblock it is necessary to face the fence with a wood facing the approximate sizes for such a facing as shown in Fig. 20 to span the knives so that only the required amount of knives are exposed when making a moulding.

The facing is secured to the fence with wood screws through holes provided.

Before securing the knives always ensure that the slots and knives are free from sawdust and dirt.

SAFETY PRECAUTIONS

Always adjust the guard to protect as much of the saw as possible and fit the riving knife ¼" (6 mm) behind the saw at the rear. These adjustments are previously described.

Use a push stick as Fig. 21 as much as practicable when feeding timber to avoid accident.

When changing equipment always isolate the machine electrically.

SAW MAINTENANCE

Efficient operation of a circular saw depends on true running of the saw spindle and the collars being perfectly square on the faces with the axis of the spindle, it must run at the correct peripheral speed to ensure straight cutting.

The Bursgreen Circular Saw Bench embodies all these requirements and provided the sawblade is maintained in a sharp condition with the teeth correctly sharpened and set, efficient service, will be given.

Before putting a new saw to use, it is essential that it is "ranged down" on the teeth, to ensure each tooth is cutting and to maintain true running.

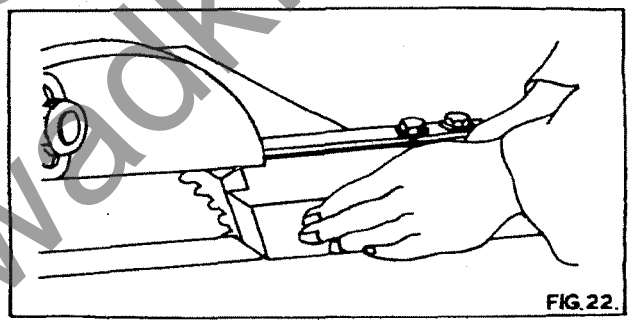
FIG. 22.

RANGING

Ranging down should be done on a new saw or any saw after the fourth or fifth re-sharpening.

To range down a saw feed a square edged abrasive block, in wooden holder, as shown in Fig. 22, lightly against the sawteeth whilst running. The saw should then be removed and the tops of the teeth filed to remove the ranging marks on the points.

SAW SHARPENING

Do not run a saw when blunt, remove and re-sharpen.

To sharpen by hand, hold the saw rigid in a vice as shown in Fig. 23 then proceed to sharpen the saw.

With rip saw teeth, chisel edges and square faces are required see Fig. 24. Sharpen by giving each tooth an equal number of strokes with a flat faced saw file with rounded edges. At the same time file the gullet, taking care to keep the gullet well rounded.

With a crosscut saw points are needed with back and front bevels as Fig. 25.

In the course of repeated filing the teeth lose the original shape and the gullets shallow. To restore the shape of each tooth, essential for satisfactory performance, it is necessary to grind the saw on a saw sharpening machine. These machines are usually of the automatic type and feed each tooth giving equal spacing or pitch.

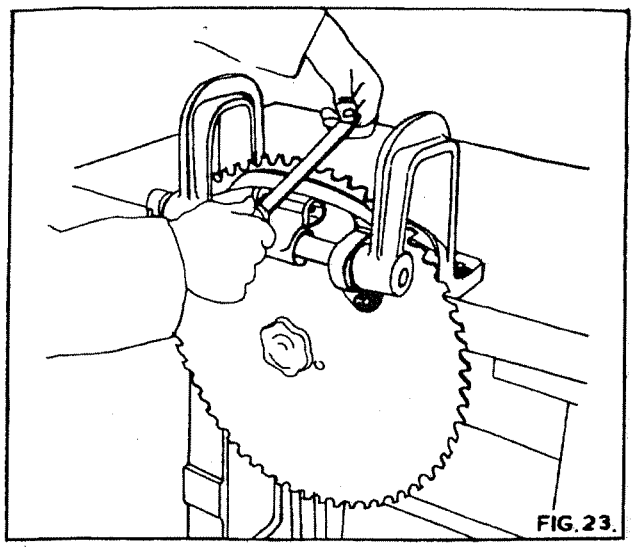

FIG. 23.

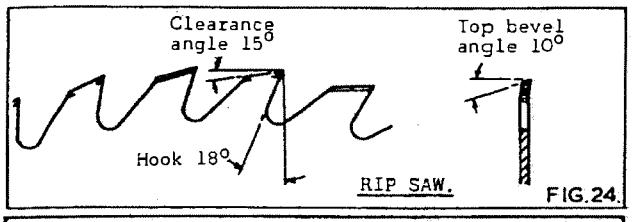

FIG. 24.

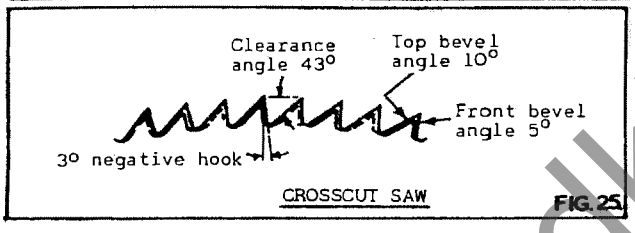

FIG. 25.

SETTING

The amount of set to the teeth should be sufficient to give clearance to the body of the saw, so that there is freedom from friction between saw and timber. It is generally accepted that the teeth are "spring set", i.e. the tips of alternate teeth are bent to the right and left as shown in Fig. 26. For good sawing the amount of set on each side of the saw must be identical, otherwise the saw will run to one side. To check the set, cut into a piece of wood a few inches when a small even triangle should be as in Fig. 27.

The exact amount of set each side varies with the timber being cut, usually .010" to .015" (.3 mm to .4 mm).

For clean cutting, just sufficient should be allowed to prevent bending and heating. More set is required for wet, woolly timber, than for dry, close grained timber and the amount of set is greater for crosscutting saws than those for ripping.

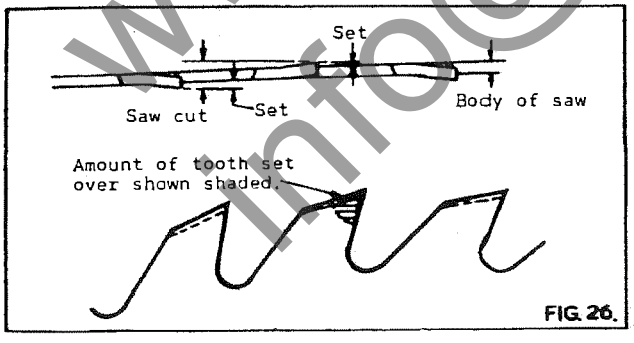

FIG. 26.

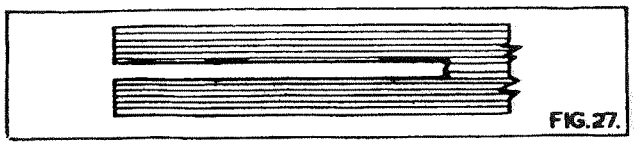

FIG. 27.

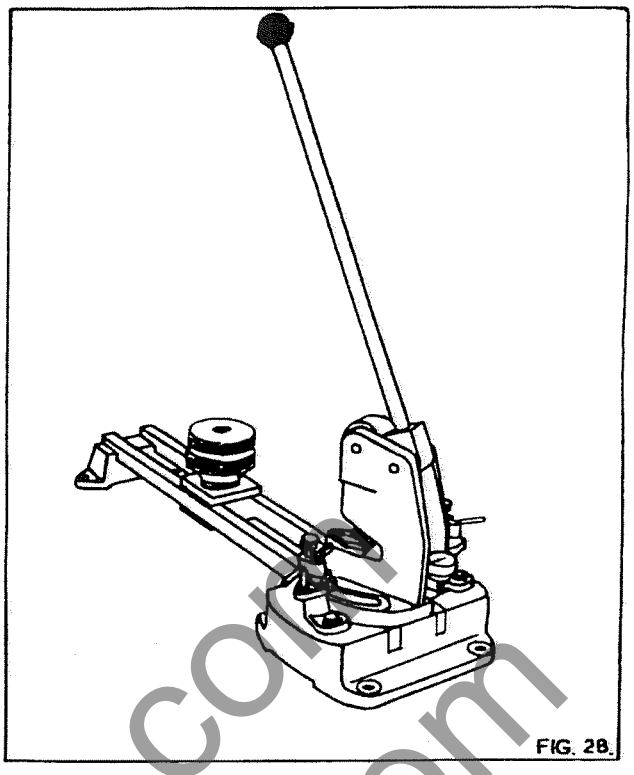

FIG. 28.

MACHINE SETTING

We can supply a small machine for efficiently setting the teeth as illustrated in Fig. 28, and will deal with saws 8" to 36" (202 mm to 910 mm) diameter. The micrometer dial indicates accurate reading of the amount of set in thousandths of an inch.

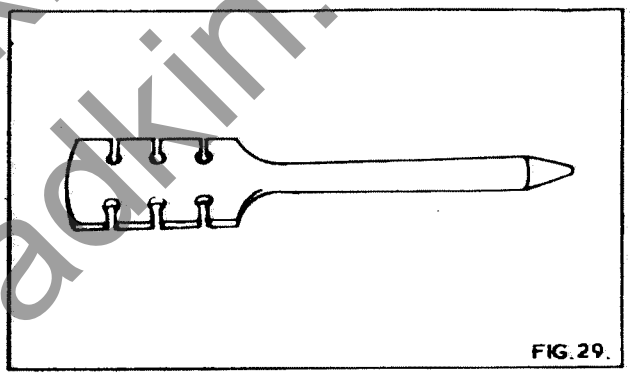

FIG. 29.

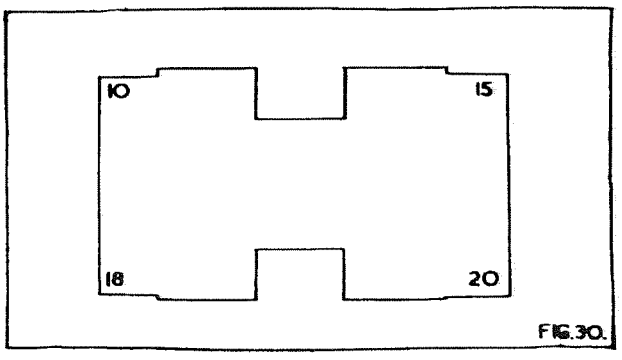

FIG. 30.

HAND SETTING

Where the number of saws does not warrant a machine being installed the saws are set by hand using a tool as shown in Fig. 29. This tool is provided with six notches to take saws 8 to 14 gauge thick, while the amount of "set over" is derived by using the gauge shown in Fig. 30.

For this process of setting, the saw should be securely clamped in a vice.

MAIN FRAME ASSEMBLY

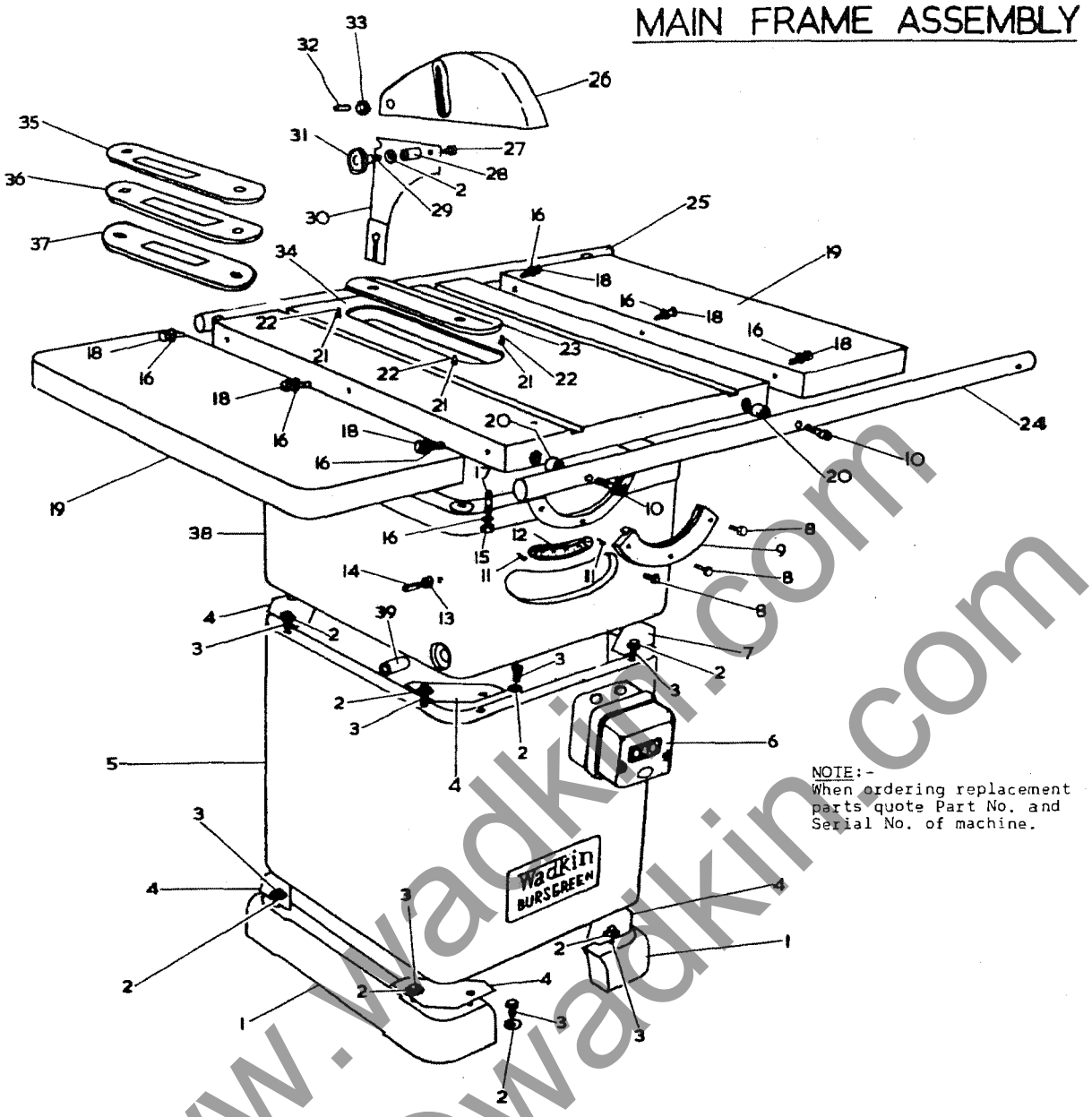

NOTE:-
When ordering replacement parts quote Part No. and Serial No. of machine.

Ref.No.	Part No.	No.off	Description
1.	C-1030/6	2	Foot for base.
2.		16	⅜" cadmium washer.
3.		15	⅜" whit. x ¾" long hexagon head cadmium bolt.
4.		6	Fillets for base.
5.	E-1030/7	1	Base.
6.	84 ADS	1	MEM starter (3HP, 50cycle)
	A.T.3	1	Brook starter (3HP, 60cycle).
	Z.T.3	1	Brook starter (5HP, 50cycle)
	Z.T.3	1	Brook starter (5HP, 60cycle)
7.		2	Special fillet for base.
8.		6	5/16" whit. x ¾" long hexagon head cadmium bolt.
9.	C-1026/7	2	Trunnion trapping plate.
10.		4	⅜" whit. x 1¾" long socket head capscrew.
11.		2	⅛" whit. x ⅜" long round head screw.
12.	B-1026/17	1	Angle indicator rule.
13.		2	⅜" whit. cadmium nut.
14.		2	⅜" whit. x 1½" long nicked grubscrew.
15.		4	⅜" whit. nut.
16.		10	⅜" B.S.F. washer.
17.		4	⅜" whit. x 1⅜" long stud.
18.		6	⅜" whit. x 1¼" long hexagon head bolt.
19.	C-1030/5	2	Extension table.
20.	A-1026/51	4	Fence slide bar distance piece.
21.		4	3/16" whit. locknut.
22.		4	3/16" whit. x ½" long nicked grubscrew.
23.	C-1030/9	1	Fingerplate.
24.	B-1030/36	1	Fence front slide bar (Std).
	B-1030/76	1	Fence front slide bar (50" capacity) (1260mm capacity).
25.	B-1026/41	1	Fence back slide bar (Std.)
	B-1030/77	1	Fence back slide bar (50" capacity) (1260mm capacity).
26.	C-1030/10	1	Saw guard.
27.		1	⅜" whit. x ½" long hexagon head bolt.
28.	A-1026/60	1	Riving knife distance piece.
29.		1	⅜" whit. x 1" long stud.
30.	B-1030/80	1	Riving knife.
31.	Patt.No.32.	1	1¾" dia. plastic handwheel, ⅜" whit.
32.		1	⅜" dia. x 1½" long groverlok spring dowel.
33.	A-1030/31	1	Saw guard pivot.
34.	D-1030/1	1	Main table.
35.	C-1030/44A	1	Fingerplate for 8" dia. dado set
36.	C-1030/44B	1	Fingerplate for 8" dia. wobble saw.
37.	C-1030/45	1	Fingerplate for 4⅞" dia. cutterblock.
38.	E-1030/2	1	Mainframe.
39.		2	¾" bore x ⅞" O/D x ¾" long oilite bush.

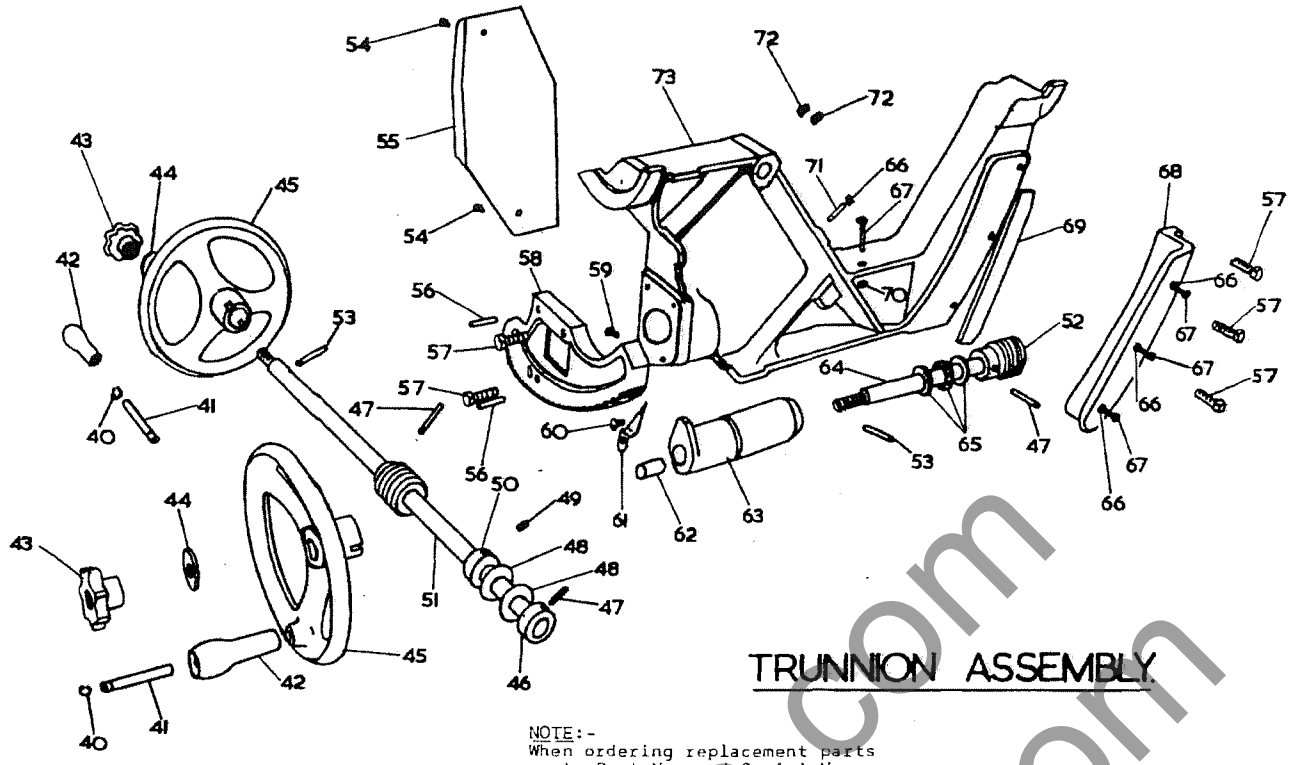

TRUNNION ASSEMBLY.

NOTE:-
When ordering replacement parts quote Part No. and Serial No. of machine.

Ref.No.	Part No.	No.off	Description
40.	5555-37	2	"Truarc" grip ring circlip.
41.	A-S-101	2	Spindle for 3" plastic handle.
42.	Patt.No.4	2	3" plastic handle.
43.	Patt.No.14	2	2" dia. plastic handwheel. ½". whit. T.R.T.
44.	A-1026/22	2	Washer for handwheel.
45.	C-1030/14	2	7½" dia. dished handwheel.
46.	A-1026/29	1	Canting shaft collar (without ⅜" whit. hole).
47.		3	3/16" dia. x 1¼" long groverlok spring dowel.
48.	A-1026/65	2	Fibre washer for canting shaft.
49.		1	⅜" whit. x ½" long socket head grubscrew.
50.	A-1026/29	1	Canting shaft collar (with ⅜" whit. hole).
51.	B-1030/24	1	Canting shaft.
52.	A-1026/32	2	Worm for R & F and canting.
53.		2	3/16" dia. x 1½" long groverlok spring dowel.
54.		2	¼" whit. x ½" long hexagon head cadmium bolt.
55.	B-1030/26	1	Chip guard.
56.		2	5/16" dia. x 1¼" long groverlok spring dowel.
57.		5	⅜" whit x 1¼" long hexagon head cadmium bolt.
58.	D-1030/11	1	Racked quadrant for canting.
59.	A-1026/33	1	¼" gas pipscrew.
60.		1	¼" whit. x ⅜" long round head screw.
61.	A-1030/38	1	Angle indicator pointer.
62.		2	¾" bore x ⅞" O/D x ¾" long oilite bush.
63.	B-1026/6	1	Rise and fall shaft bearing.
64.	B-1026/20	1	Rise and fall shaft.
65.	EW.¾"	1	Hoffmann thrust race.
66.		4	¼" whit. locknut.
67.		4	¼" whit. x 1¼" long square head bolt.
68.	C-1030/8	1	Motor bracket trapping piece.
69.	A-1030/28	1	Retaining strip for motor bracket.
70.		1	¼" whit. nut.
71.		1	¼" whit. x 1¼" long nicked grubscrew.
72.		2	⅛" gas x ½" long socket head grubscrew.
73.	D-1030/3	1	Trunnion bracket.

SAW SPINDLE ASSEMBLY.

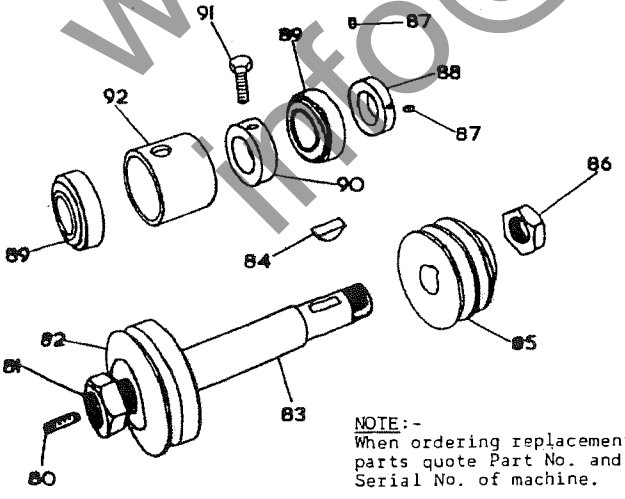

NOTE:-
When ordering replacement parts quote Part No. and Serial No. of machine.

Ref.No.	Part No.	No.off	Description
80.		1	½" whit. L.H. x 1¾" long socket head grubscrew.
81.	A-1040/10	1	Saw spindle nut (1" acme).
82.	A-1030/18	1	Front saw flange.
	A-1030/67	1	25 mm front saw flange.
83.	C-1030/17	1	Saw spindle.
84.		1	5/16" woodruff key.
85.	B-1030/51	1	Saw spindle pulley (3HP, 50 cycles & 3HP, 60cycles).
	B-1030/73	1	Saw spindle pulley (5HP, 50 cycles).
	B-1030/68	1	Saw spindle pulley (5HP, 60 cycles).
86.	A-1030/20	1	Saw spindle locknut (1" fine thread).
87.		2	¼" whit. x ⅜" long socket head grubscrew.
88.	A-1030/23	1	Saw spindle locking collar.
89.	5GB8506	2	S.K.F. sealed bearings.
90.	A-1030/22	1	Saw spindle trapping collar.
91.		1	⅜" whit. x 1¼" long hexagon head cadmium bolt.
92.	A-1030/21	1	Saw spindle distance piece.

MOTOR MOUNTING ASSEMBLY

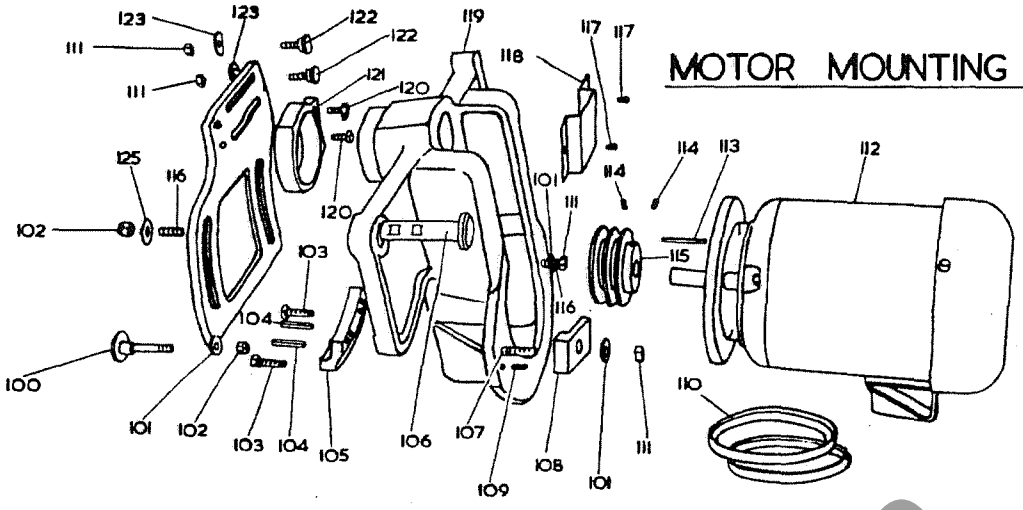

Ref.No.	Part No.	No.off	Description
100.	A-1030/81	1	Riving knife bracket trapping bolt
101.		3	⅜" washer.
102.		2	⅜" whit. aerotight nut.
103.		2	⅜" whit. x 1½" long hexagon head cadmium bolt.
104.		2	5/16" dia. x 1¼" long groverlok spring dowel.
105.	D-1030/12	1	Racked quadrant for R & F
106.	D-1030/27	1	Pivot pin for slide bracket.
107.		1	⅜" whit. x 1¾" long stud.
108.	A-1030/25	1	Motor clamp.
109.		1	3/16" dia. x ¾" long groverlok spring dowel.
110.	A-24	2	Vee belt (3HP, 50 cycles & 3HP, 60 cycles).
	ALPHA 250	3	Vee belt (5HP, 50 cycles).
	ALPHA 250	3	Vee belt (6HP, 60 cycles).
111.		4	⅜" whit. nut.
112.		1	Brook motor, M66B, 3HP, 3000 rpm T.E.F.C. (3HP, 50 cycles).
		1	Brook motor, M66B, 3HP, 3600 rpm T.E.F.C. (3HP, 60 cycles).
		1	Brook motor D100L, 5HP, 3000 rpm T.E.F.C. (5HP, 50 cycles).
		1	Brook motor D100L, 5HP, 3600 rpm T.E.F.C. (5HP, 60 cycles).

Ref.No.	Part No.	No.off	Description
113.		1	3/16" wide x 1⅛" long key.
114.		2	5/16" whit. x ½" long socket head grubscrew.
115.	B-1030/52	1	Motor pulley (3HP, 50 cycles)
	B-1030/54	1	Motor pulley (3HP, 60 cycles)
	B-1030/72	1	Motor pulley (5HP, 50 cycles)
	B-1030/69	1	Motor pulley (5HP, 60 cycles)
116.		2	⅜" whit. x 1½" long stud.
117.		2	¼" whit. x ½" long round head screw.
118.	B-1030/34	1	Belt guard.
119.	D-1030/4	1	Spindle housing and motor bracket.
120.		2	5/16" whit. x ¾" long hexagon head cadmium bolt.
121.	B-1030/79	1	Riving knife pivot bracket.
122.	A-1026/96	2	Bolt for riving knife.
123.	A-1032/22	2	Riving knife washer.
124.	C-1030/78	1	Riving knife bracket.
125.	A-1024/58	1	Riving knife bracket retaining washer.

NOTE:-
When ordering replacement parts quote Part No. and Serial No. of machine.

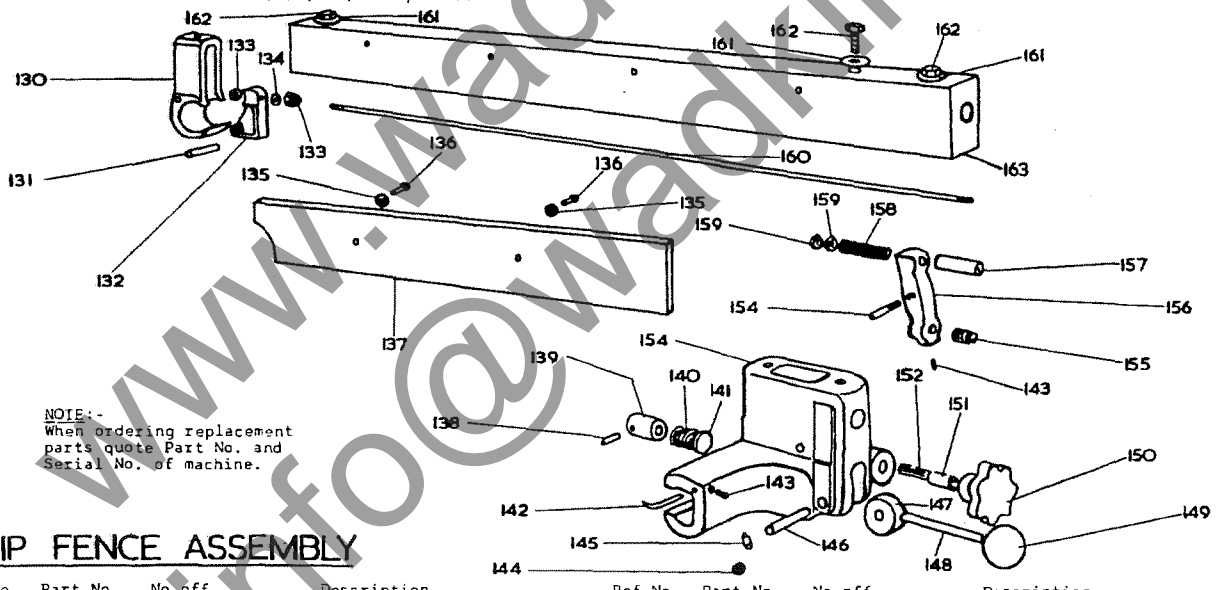

NOTE:-
When ordering replacement parts quote Part No. and Serial No. of machine.

RIP FENCE ASSEMBLY

Ref.No.	Part No.	No.off	Description
130.	B-1026/36	1	Rip fence back bracket.
131.		1	⅜" dia. x 1¾" long groverlok spring dowel.
132.	B-1026/37	1	Rip fence back lock.
133.		2	¼" whit. aerotight nut.
134.		1	¼" double coil spring washer.
135.		2	¼" washer.
136.		2	¼" whit. x 2¼" long round head screw.
137.	B-1030/61	1	Rip fence plate (special to order only).
138.		1	¼" dia. x ¾" long groverlok spring dowel.
139.	A-1026/48	1	Rip fence locking plunger bush.
140.	A-1026/49	1	Rip fence locking plunger spring.
141.	A-1026/47	1	Rip fence locking plunger.
142.	A-1026/54	1	Rip fence pointer.
143.		2	¼" whit. x ⅜" long socket head grubscrew.
144.		1	⅜" whit. locknut.
145.	A-1026/50	1	Rip fence locking plunger pipscrew.

Ref.No.	Part No.	No.off	Description
146.	A-1026/56	1	Rip fence cam pivot pin.
147.	A-1026/43	1	Rip fence locking cam.
148.	A-1026/53	1	Rip fence locking handle.
149.	Patt.No.2B.	1	1¼" dia. plastic ball, ⅜" whit.
150.	Patt.No.14.	1	2" dia. plastic handwheel, 5/16"bore
151.		1	5/16" bore x ½" O/D x ¾" long oilite bush.
152.	A-1026/42	1	Rip fence pinion.
153.	D-1026/35	1	Rip fence front bracket.
154.	A-1026/55	1	Rip fence locking lever pivot.
155.	A-1026/44	1	Rip fence locking lever adjusting screw.
156.	A-1026/38	1	Rip fence front locking lever.
157.	A-1026/46	1	Rip fence connecting rod nut.
158.	A-1044/69	1	Spring for fence locking bar.
159.		2	¼" whit. locknut.
160.	A-1030/37	1	Rip fence connecting rod.
161.		3	⅜" bright cadmium washer.
162.		3	⅜" whit. x ¾" long hexagon head bright cadmium bolt.
163.	C-1030/30	1	Rip fence body.

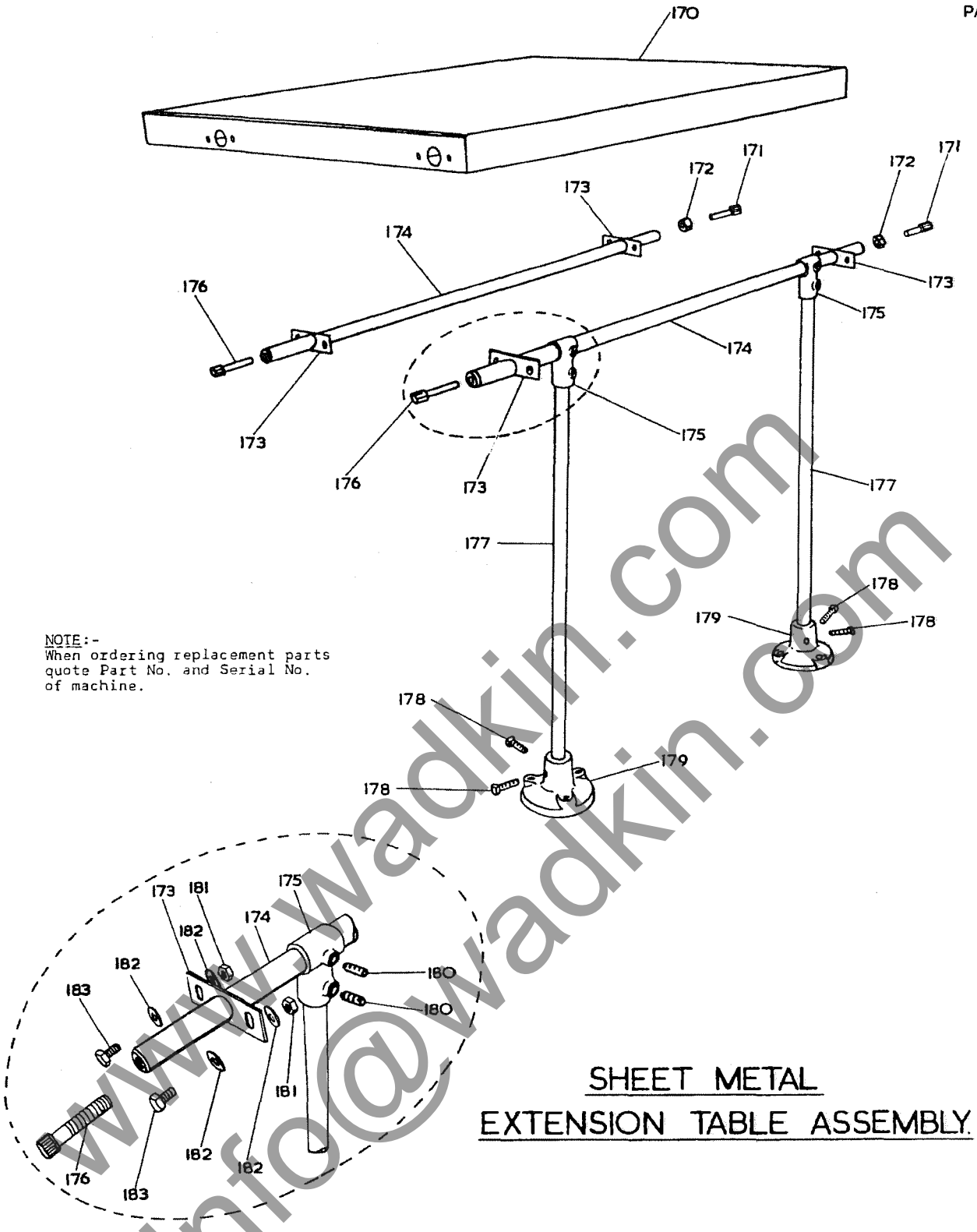

NOTE:-
When ordering replacement parts quote Part No. and Serial No. of machine.

SHEET METAL EXTENSION TABLE ASSEMBLY

Ref.No.	Part No.	No.off	Description
170.	D-1030/39	1	Sheet steel extension table.
171.		2	⅜" whit. x 1¾" long socket head capscrew.
172.		2	⅜" whit. nut.
173.	A-1026/80	4	Adjuster plate for sheet steel extension table.
174.	A-1030/42	2	Tie bar for extension table.
175.	B-1026/99	2	Tee filboe for extension table.
176.		2	⅜" whit. x 1¼" long socket head capscrew.
177.	A-1026/84	2	Support leg for sheet steel extension table.
178.		4	⅜" whit. x ¾" long square head bolt.
179.	A-1026/85	2	Support foot for sheet steel extension table.
180.		4	⅜" B.S.F. x ⅜" long socket head grubscrew.
181.		8	¼" whit. nut.
182.		16	¼" washer.
183.		8	¼" whit. x ½" long hexagon head bolt.

MITRE FENCE ASSEMBLY.

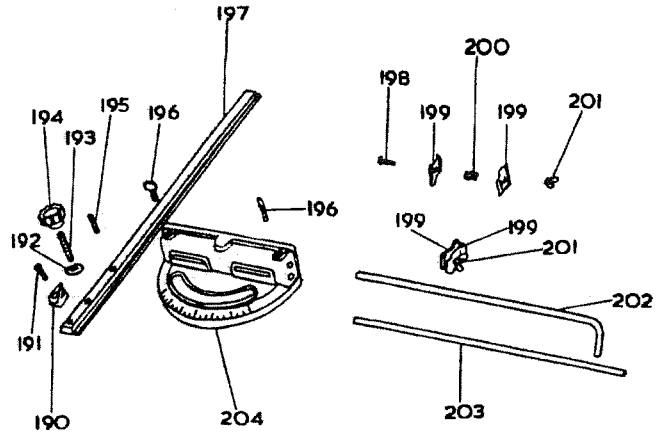

Ref.No.	Part No.	No.off	Description
190	A-1026/172	1	Mitre fence pointer.
191.		1	¼" whit. x ¾" long cheese head screw.
192.	A-1026/174	1	Washer for mitre fence.
193.		1	5/16" whit. x 1½" long stud.
194.	Patt.No.32	1	1½" dia. plastic handwheel, 5/16" whit.
195.		1	⅜" whit. x ¾" long fluted dowel.
196.		2	¼" whit. thumbscrew.
197.	B-1030/33	1	Mitre fence tongue.
198.		2	¼" whit. x ¾" long coach bolt.
199.	A-1026/68	4	Mitre fence stop plate.
200.	A-1026/73	2	Mitre fence stop plate spring.
201.		2	¼" whit. wingnut.
202.	B-1026/69	1	Mitre fence stop rod (cranked).
203.	B-1026/69	1	Mitre fence stop rod (straight).
204.	C-1026/168	1	Mitre fence body.

NOTE:-
When ordering replacement parts quote Part No. and Serial No. of machine.

AMERICAN SAW GUARD (SPECIAL).

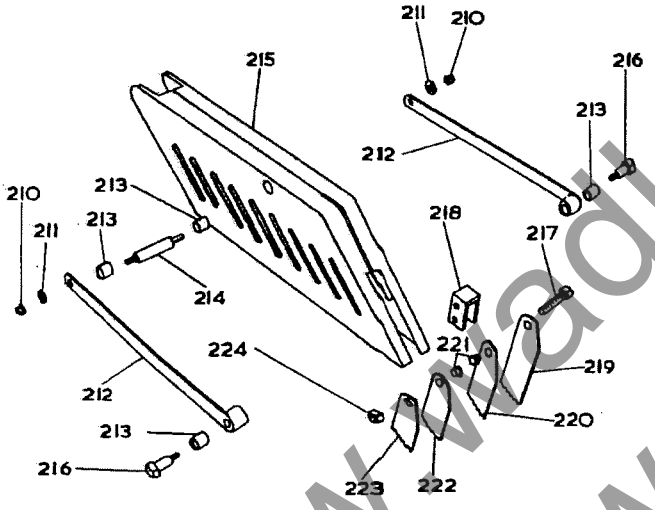

Ref.No.	Part No.	No.off	Description
210.		2	¼" whit aerotight nut.
211.		2	¼" washer.
212.	A-1030/63	2	American saw guard pivot arm.
213.		4	⅜" bore x ½" O/D x ½" long nylon bush.
214.	A-1026/108.	1	Front pivot pin.
215.	D-1030/62	1	American saw guard.
216.	A-1026/107.	2	Back pivot screw.
217.		1	¼" whit. x 1" long hexagon head bolt.
218.	A-1026/104	1	Pivot block for arm.
219.	A-1030/32	1	Kick back finger (5⅛" long).
220.	A-1030/32	1	Kick back finger (4⅜" long).
221.	A-1026/109	2	Riving knife pivot bush.
222.	A-1030/32	1	Kick back finger (3⅝" long).
223.	A-1030/32	1	Kick back finger (2⅞" long).
224.		1	¼" whit. nut.

NOTE:-
When ordering replacement parts quote Part No. and Serial No. of machine.

WOBBLE SAW ASSEMBLY (EXTRA)

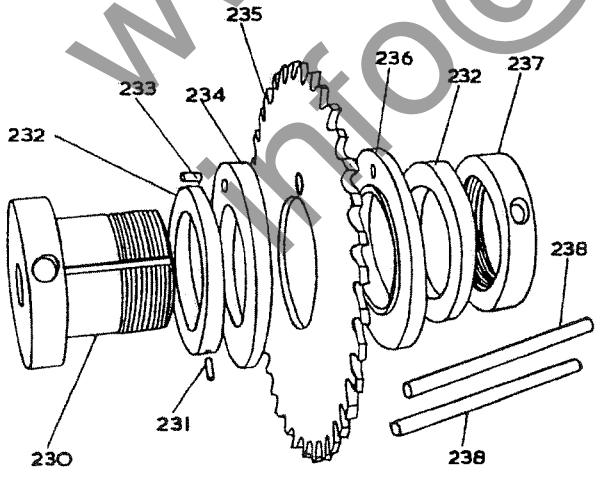

Ref.No.	Part No.	No.off	Description
230.	A-1792/127	1	Wobble saw adaptor.
231.		1	⅛" dia. x ½" long dowel.
232	A-1792/130	2	Small wobble saw collar.
233.		1	¼" dia. x ⅜" long fluted dowel.
234.	A-1792/129	1	Large plain wobble saw collar.
235.	B-S-72B	1	8" dia. wobble saw.
236.	A-1792/128	1	Large spigotted wobble saw collar.
237.	A-1792/131	1	Wobble saw locknut.
238.	A-1792/135	2	Wobble saw toggle bar.

NOTE:-
When ordering replacement parts quote Part No. and Serial No. of machine.

EXTRA EQUIPMENT

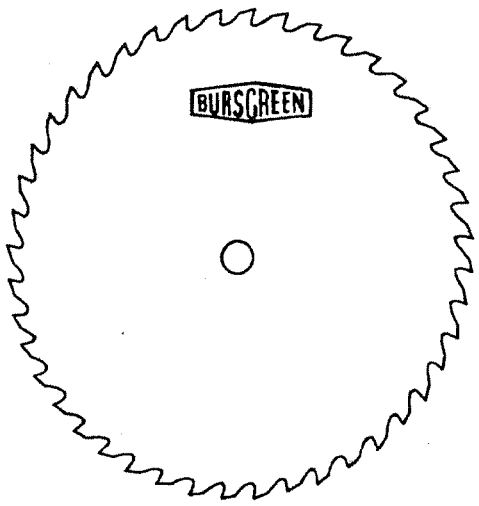

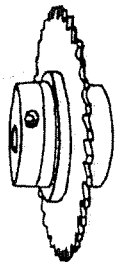

WOBBLING OR GROOVING SAW

This saw can be set to cut any width of groove between ⅛" and 1" (3 mm and 25 mm) and can be removed from the spindle without disturbing the setting; once set the saw and collars remain tightly locked on a screwed sleeve. Maximum depth of cut is 2" (50 mm).

An aluminium table insert is available for use with this saw, Ref. No. 1030/44B.

A special washer No. 1030/97 is necessary for securing this head onto the saw spindle.

B.S.121.
A general purpose rip saw for hard or soft woods.

B.S.124.
For crosscutting or ripping with an exceptionally smooth finish.
B.S.125.
As above but hollow ground.

B.S.122.
A general purpose crosscut saw.

B.S.123
A general purpose hollow ground crosscut saw.

B.S.129.
For plastic materials.

This is our standard range of saws, normally available from stock. Hollow ground saws require no setting. Give minimum saw kerf or wastage and ensure exceptionally clean finish.

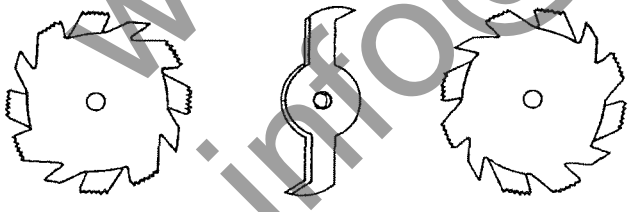

EXPANDING GROOVING SAW OR DADO HEAD

This tool is recommended for giving a smooth finish both with and across the grain in hard or soft woods. It comprises of two 8" (203mm) diameter outer saws 1-¼" (6 mm), 2-⅛" (3 mm) and 2-1/16" (1.5 mm) inner cutters for grooves up to ⅞" (22mm) wide. A special front saw flange No. 1030/43 is necessary for securing this head onto the saw spindle and should be ordered with the head.

An aluminium table insert is available for use with this head, Ref. No. 1030/44A.

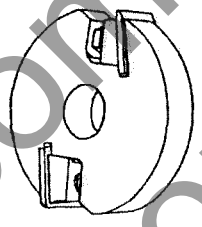

TWO KNIFE WEDGE TYPE MOULDING CUTTERBLOCK, TYPE QR11B.

This cutterblock is of simple design and made from nickel chrome steel for strength. Wedge type clamping of the cutters ensures maximum safety. The wedge and screws are easily removed for cleaning or replacing when worn. The block is 4⅞" (124 mm) diameter x 15/16" (24 mm) wide and carries two 5/32" (4 mm) or ¼" (6 mm) thick cutters.

An aluminium table insert is available for use with this block, Ref. No. 1030/45.

A special flange No. 1030/99 is necessary for securing this head onto the spindle.

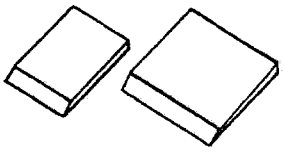

SQUARE EDGE CUTTERS FOR CUTTERBLOCK, TYPE VZ

5/32" thick x 1½" long (4mm) x (38mm)

Solid High Speed Steel

Width on cut	¾"	1"	1¼"
Part No.	VZ	VZ1	VZ2

Tungsten Carbide Tipped

Width on cut	¾"	1"	1¼"
Part No.	VZ/T	VZ1/T	VZ3/T

¼" thick x 1½" long (6mm) x (38mm)

High Speed Steel Welded to Mild Steel

Width on cut	¾"	1"	1¼"
Part No.	VZ2	VZ21	VZ22

Solid high speed steel in widths up to 3" (76mm) and high speed steel welded to mild steel in widths up to 2" (50mm) available in the bar.

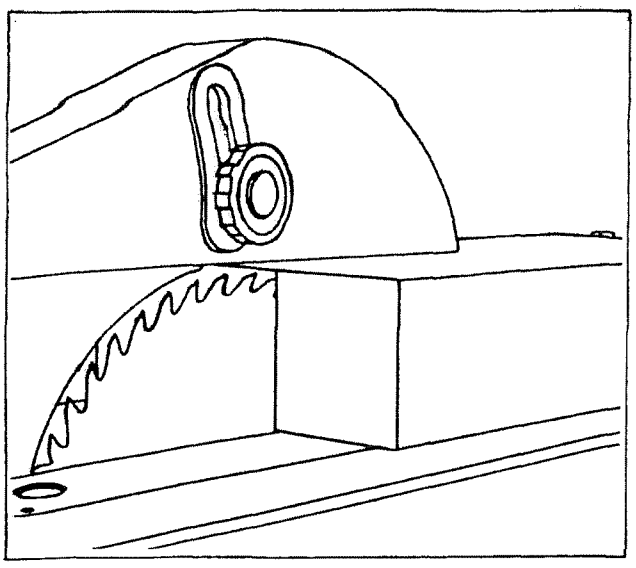

STRAIGHT RIPPING

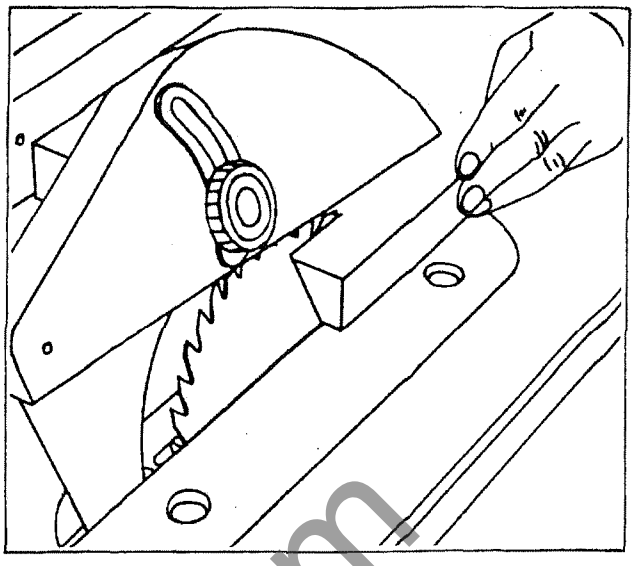

BEVEL RIPPING

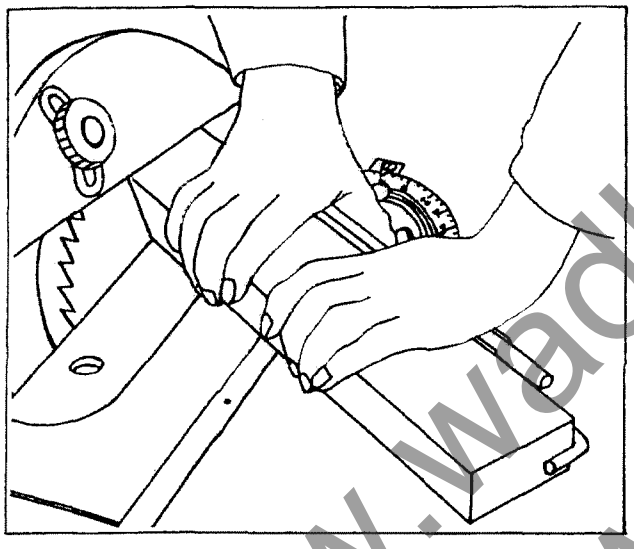

STRAIGHT OR COMPOUND MITRING.

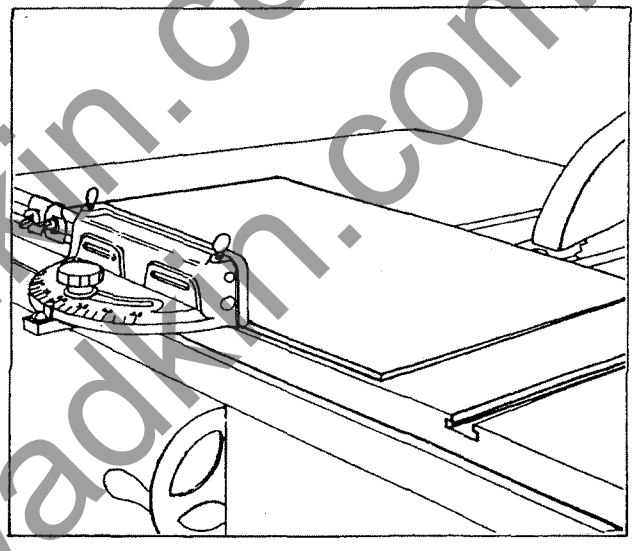

CROSSCUTTING

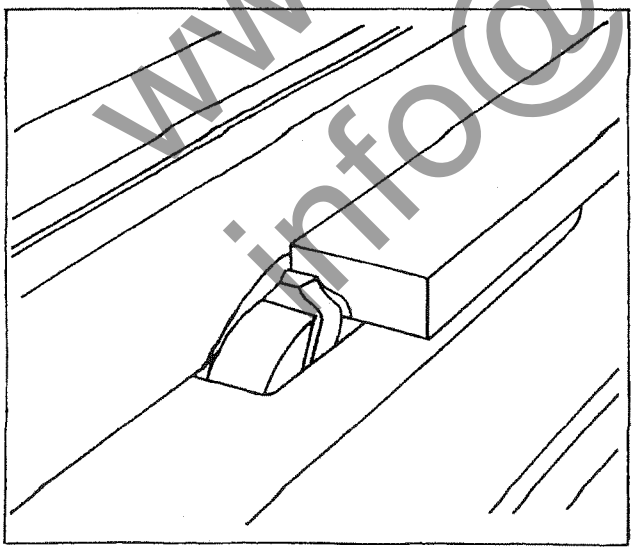

MOULDING

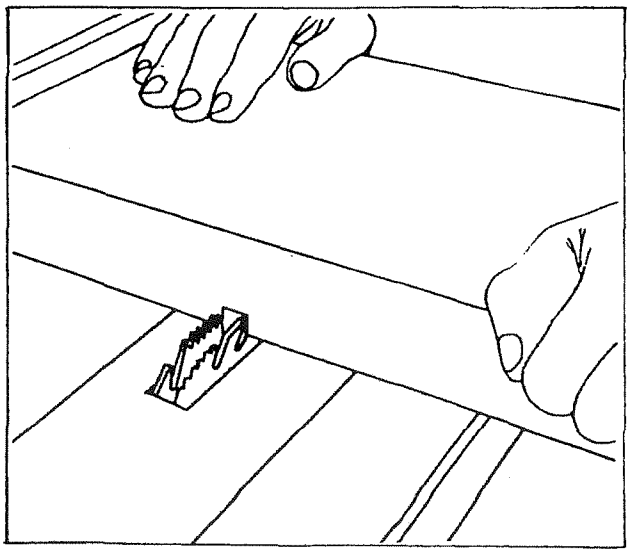

GROOVING OR TRENCHING.

THE ILLUSTRATED JOINTS CAN BE READILY DONE ON THIS MACHINE, SOME MAY REQUIRE SIMPLE JIGS.

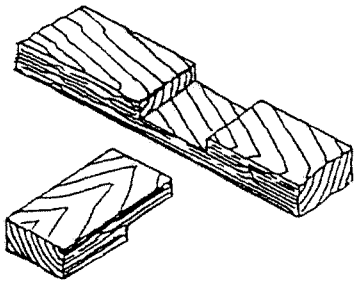

TEE HALF LAP.

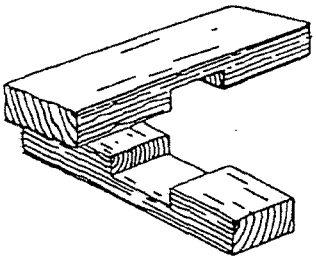

MIDDLE HALF LAP.

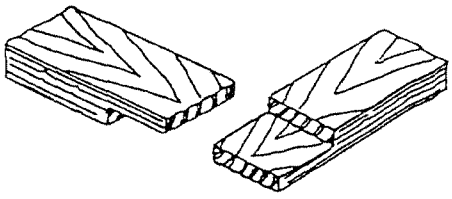

END HALF LAP.

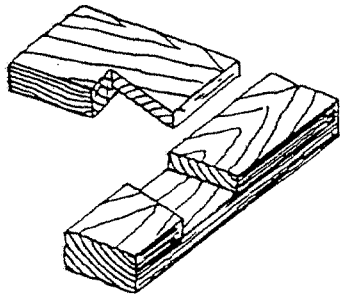

DOVETAIL HALF LAP
(ONE SIDE ONLY).

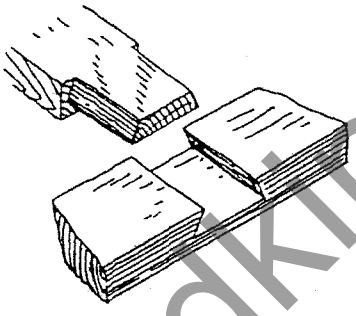

DOVETAIL HALF LAP.

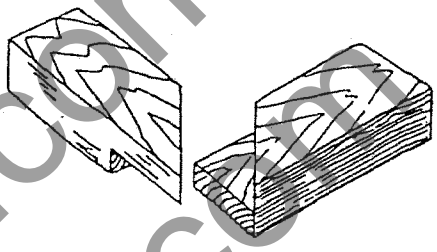

MITRED FACE WITH HALF LAP.

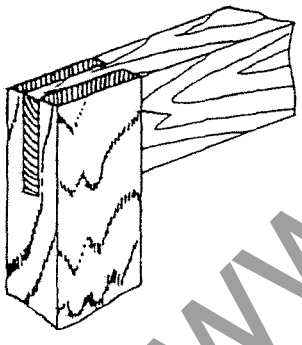

OPEN MORTISE & TENON.

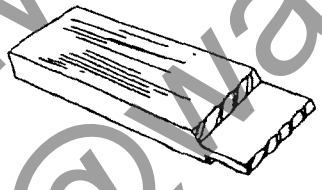

TENONS.

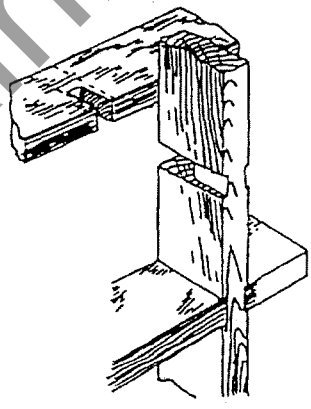

LAPPED JOINT WITH GROOVE
(USEFUL FOR SHELVING).

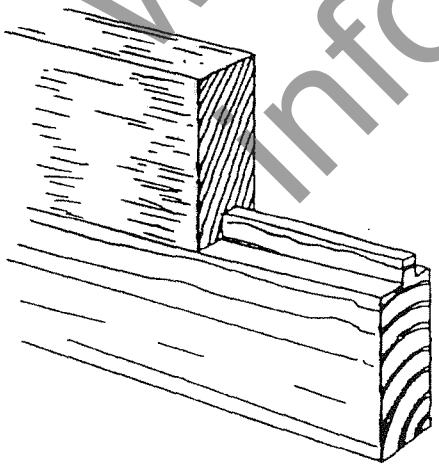

TONGUE & GROOVE

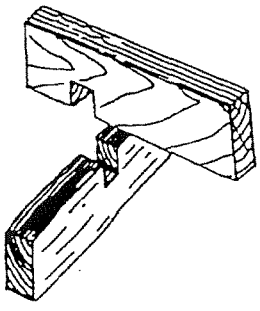

MIDDLE HALF LAP.

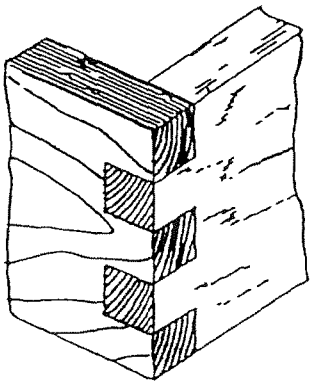

BOX JOINT.

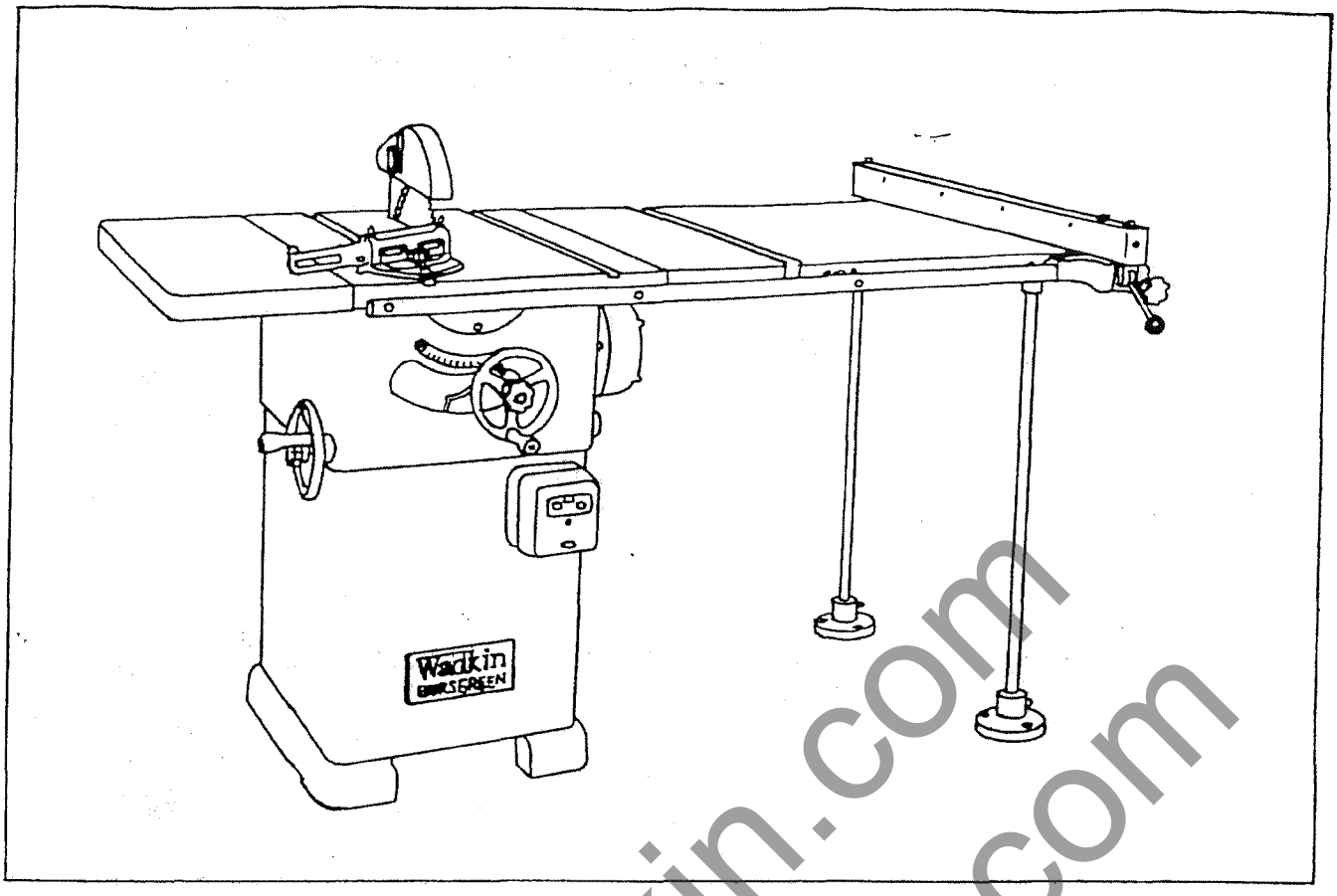

MACHINE FITTED WITH SHEET STEEL EXTENSION TABLE AND FLOOR SUPPORTS TO THE RIGHT OF SAW, TO GIVE A MAXIMUM BETWEEN SAW AND FENCE OF 50" (1270MM).

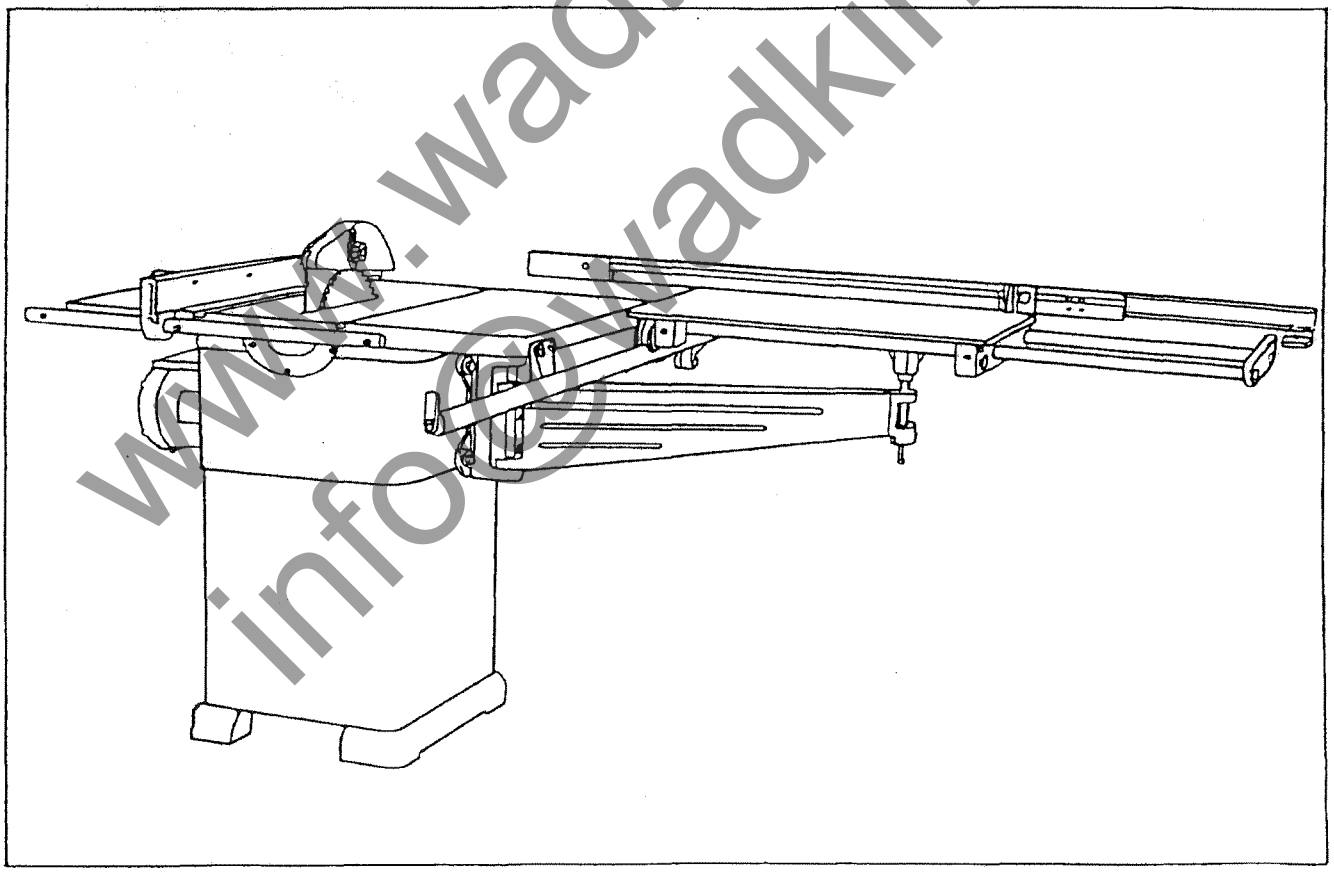

SLIDING TABLE FITTED TO THE LEFT OF SAW CONVERTS MACHINE TO AN INEXPENSIVE PANEL SAW. MAXIMUM WIDTH OF PANEL WHICH CAN BE CUT 33"X 1"(838MM X 25MM). WHEN NOT REQUIRED TABLE FOLDS OUT OF THE WAY OF THE OPERATOR.